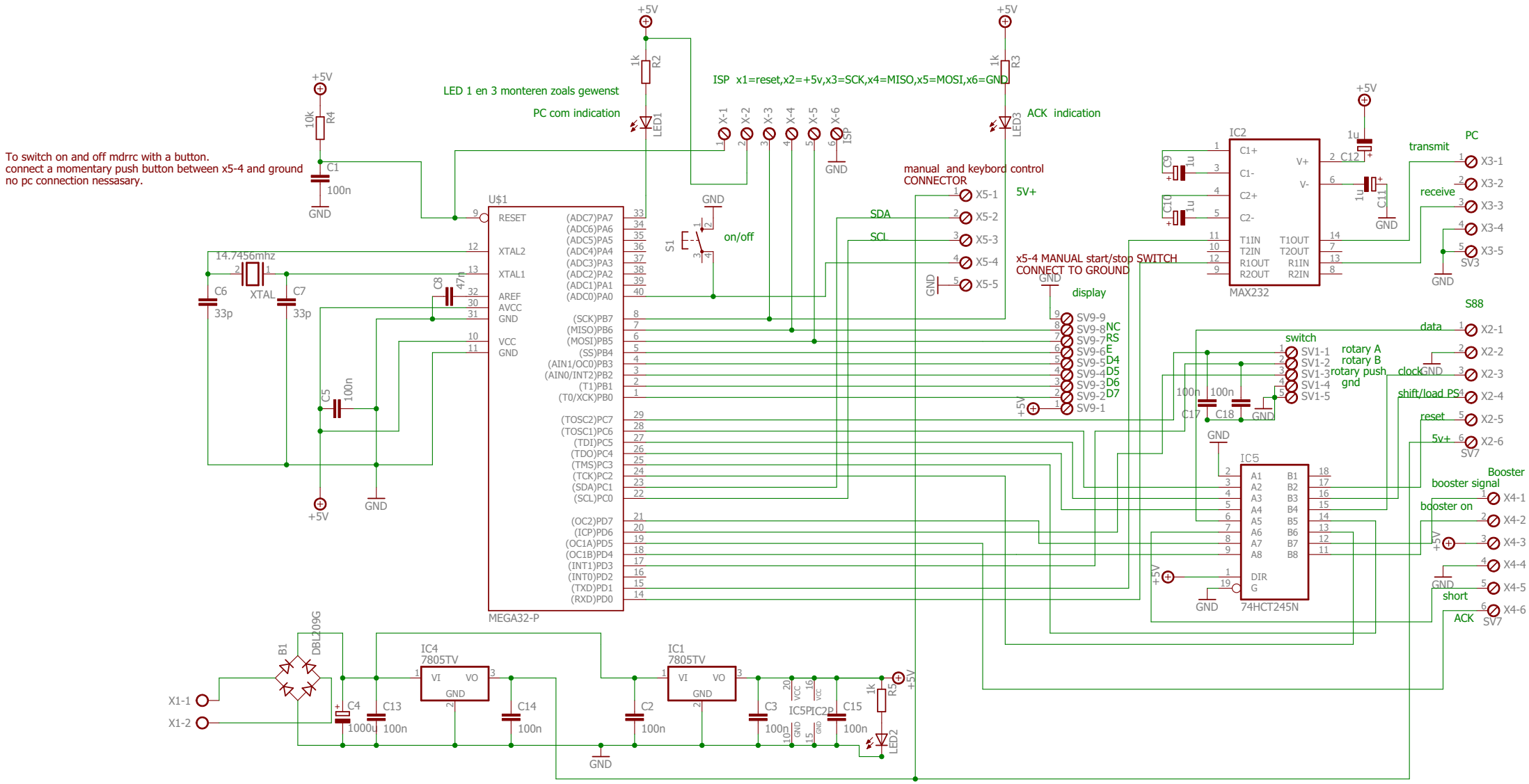

15-7-2025 17:51 f=0.84 C:\Documenten backup\CD TREIN\eagle\MDRRC controller\mdrrc nieuw.sch (Sheet: 1/1)