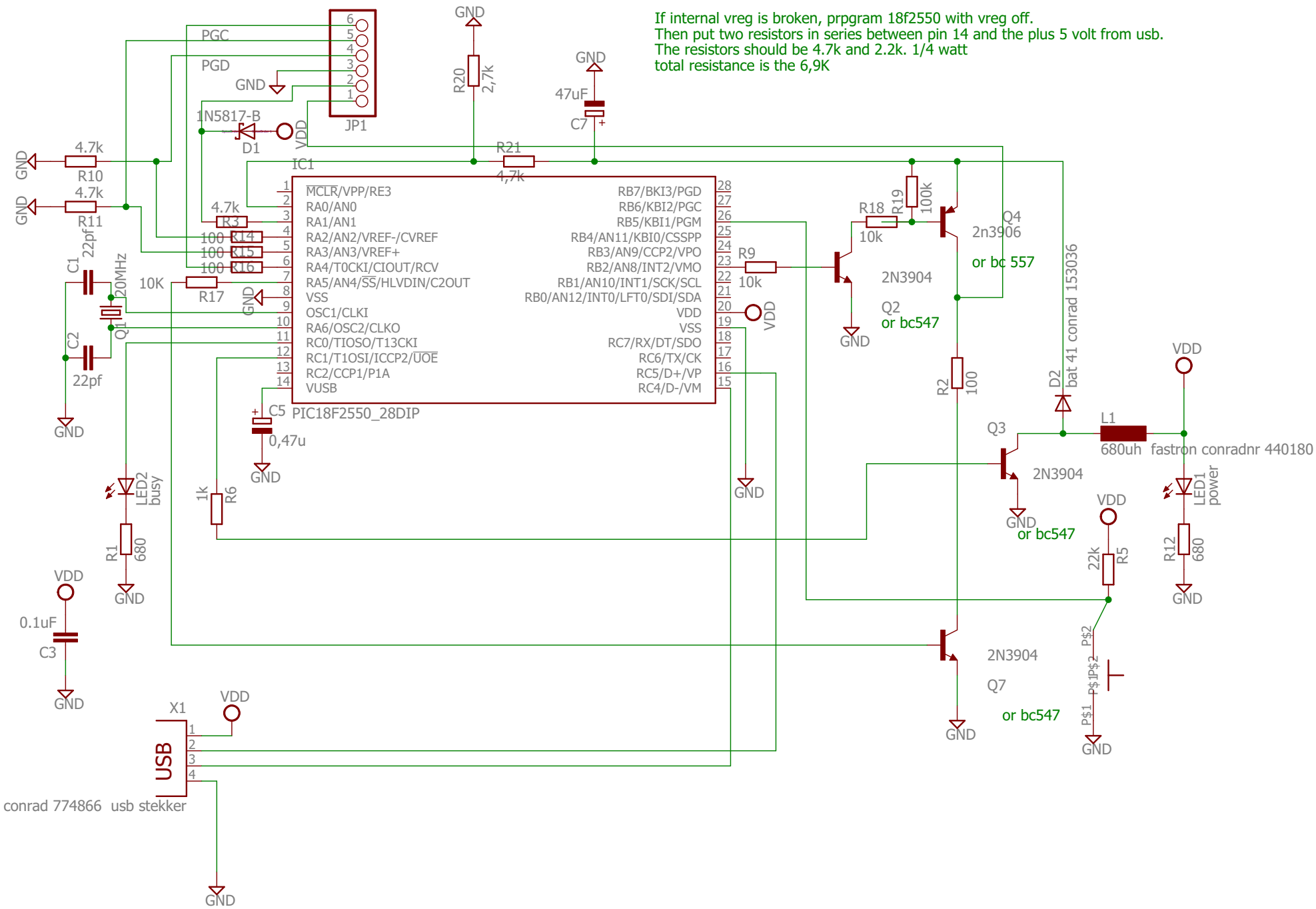
If internal vreg is broken, prpgram 18f2550 with vreg off.
Then put two resistors in series between pin 14 and the plus 5 volt from usb.
The resistors should be 4.7k and 2.2k. 1/4 watt
total resistance is the 6,9K
PGC
PGD
GND
JP1
1N5817-B
D1
VDD
R20
2,7k
47uF
C7
R21
4,7k
IC1
R10
4.7k
R11
4.7k
R3
4.7k
R14
100
R15
100
R16
100
R17
10K
C1
22pf
C2
22pf
20MHz
Q1
C5
0,47u
PIC18F2550_28DIP
MCLR/VPP/RE3
RA0/AN0
RA1/AN1
RA2/AN2/VREF-/CVREF
RA3/AN3/VREF+
RA4/T0CKI/CIOUT/RCV
RA5/AN4/SS/HLVDIN/C2OUT
VSS
OSC1/CLKI
RA6/OSC2/CLKO
RC0/TIOSO/T13CKI
RC1/T1OSI/ICCP2/UOE
RC2/CCP1/P1A
VUSB
RB7/BKI3/PGD
RB6/KBI2/PGC
RB5/KBI1/PGM
RB4/AN11/KBI0/CSSPP
RB3/AN9/CCP2/VPO
RB2/AN8/INT2/VMO
RB1/AN10/INT1/SCK/SCL
RB0/AN12/INT0/LFT0/SDI/SDA
VDD
VSS
RC7/RX/DT/SDO
RC6/TX/CK
RC5/D+/VP
RC4/D-/VM
R9
10k
R18
10k
R19
100k
Q4
2n3906
or bc 557
2N3904
Q2
or bc547
R2
100
D2
bat 41 conrad 153036
Q3
2N3904
or bc547
L1
680uh fastron conradnr 440180
LED2
busy
R1
680
1k
R6
LED1
power
R12
680
22k
R5
2N3904
Q7
or bc547
P$1
P$2
0.1uF
C3
X1
USB
conrad 774866 usb stekker