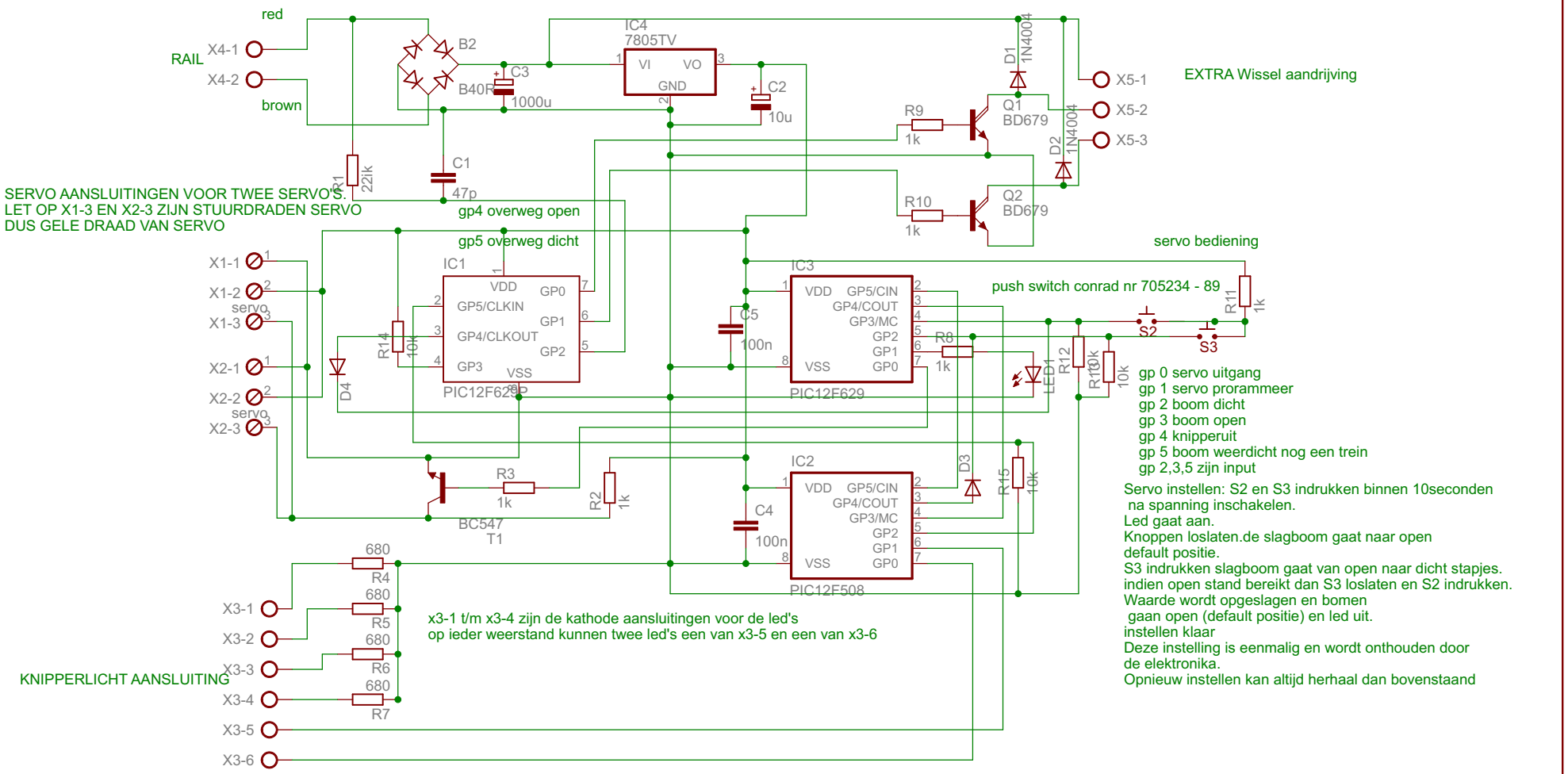

TITLE: overweg digitaal	
Document Number:	REV:
Date: 29-5-2015 14:42:01	Sheet: 1/1