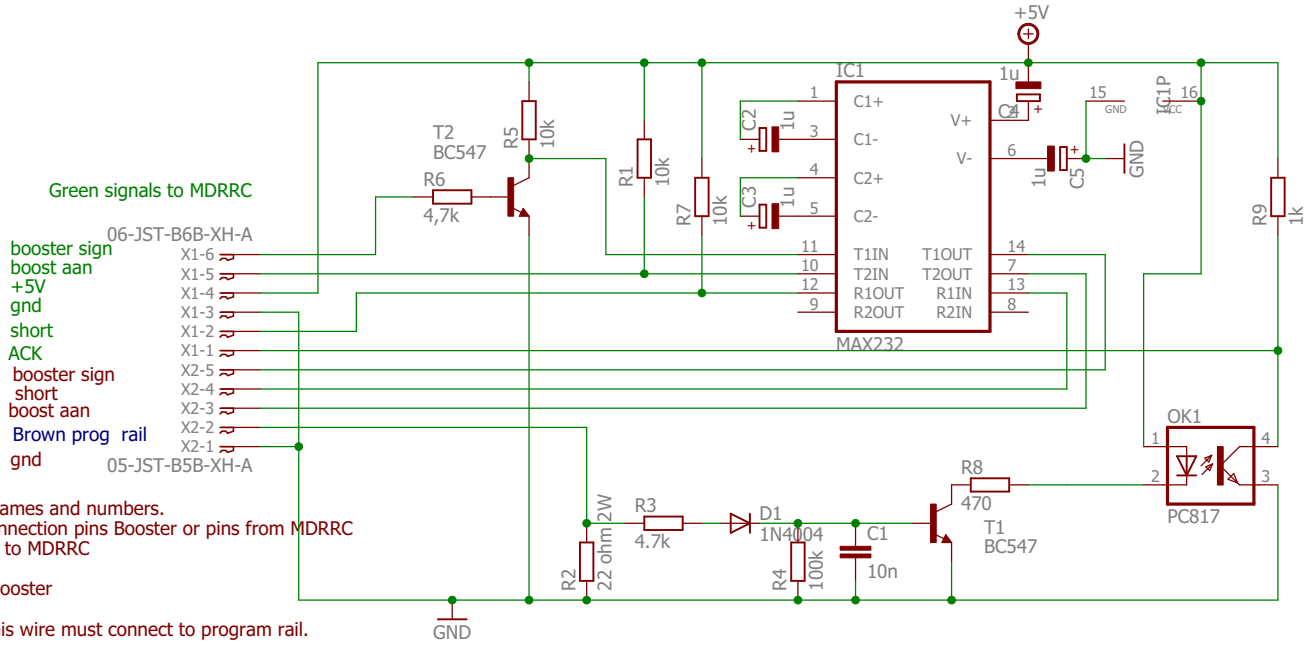

attention watch signal names and numbers.
pins are not equal to connection pins Booster or pins from MDRRC
Green collerd signals go to MDRRC

Red collord signals to Booster

exept brown prog rail this wire must connect to program rail.

The red wire from the booster has also to be connected to the other track of the program rail