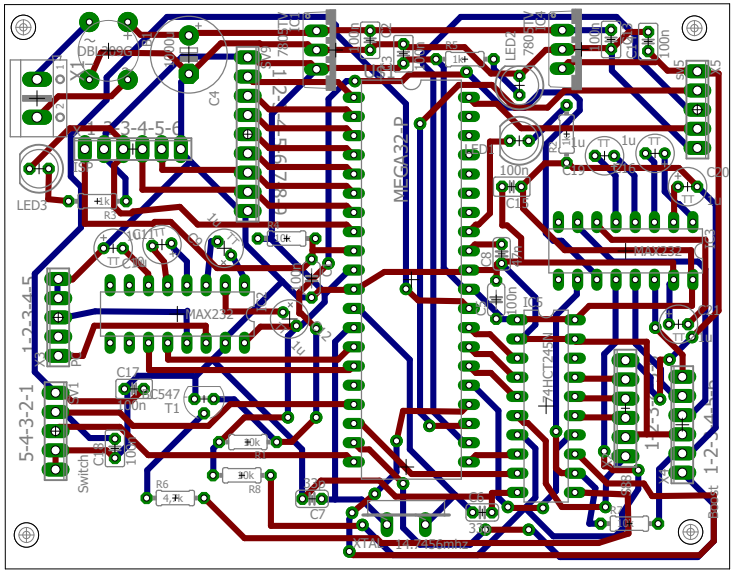

4-1-2026 14:20 C:\Documenten backup\CD TREIN\eagle\MDRRC controller\mdrrc nieuw 2.brd